Rugby Manufacturing SR-Series Hoist Manual

INSTALLATION AND OPERATOR'S MANUAL

IMPORTANT!!

Read this manual thoroughly prior to installation and operation. This manual outlines the installation and operation of an SR-series hoist & sub-frame manufactured by Rugby Manufacturing Co. This manual should be kept readily accessible for any potential operator at all times. Should you have any questions or concerns, please contact your dealer or a Rugby Manufacturing customer service representative before use.

Toll Free: 1-800-869-9162 • Office: 1-701-776-5722 • Fax: 1-701-776-6235
Visit www.rugbymfg.com for further information.

Serial Number: _____

In Service Date: _____

Table of Contents

How to Use This Manual

This manual provides guidelines and instructions for correctly operating and maintaining your Rugby Manufacturing product. Any and all people that own and operate a Rugby Manufacturing dump trailer are recommended to read and fully understand each section in this manual.

Labels

Throughout this manual, the three following types of labels will be used: **Danger**, **Warning**, and **Caution**. For the safety of the operator, it is imperative that all labels are obeyed.

DANGER

Danger: Indicate[s] a hazardous situation which, if not avoided, will result in death or serious injury.

WARNING

Warning: Indicate[s] a hazardous situation which, if not avoided, could result in death or serious injury.

CAUTION

Caution: Indicate[s] a hazardous situation which, if not avoided, could result in minor or moderate injury.

Reference Information

Serial Number

This information is required for any warranty or service inquiries, and should be recorded on the front page of this manual for easy reference.

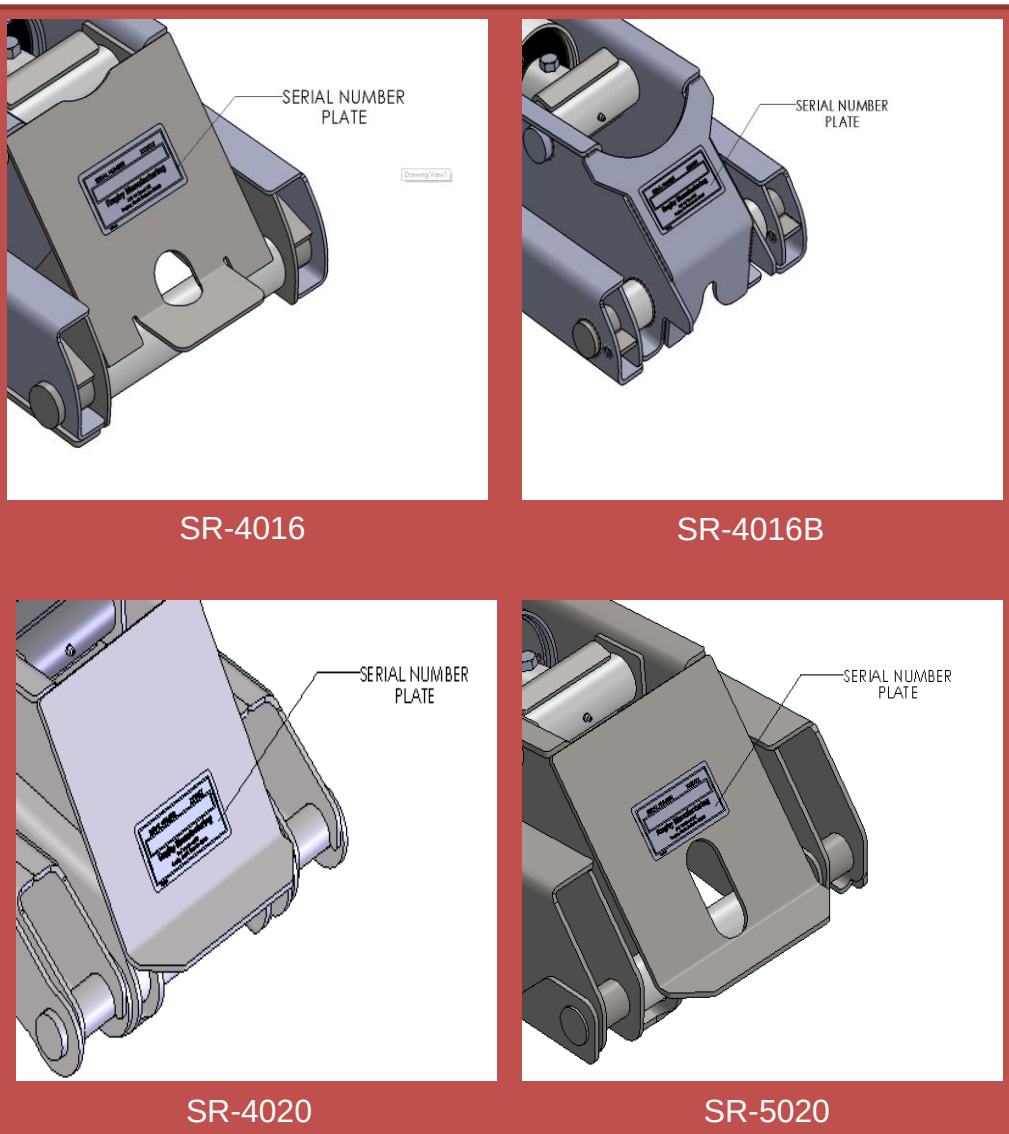

SR-4016 SR-4016B

SR-4020 SR-5020

Figure 1: Serial Number Locations

The serial number is a decal located on the spacer plate of the hoist. **(Figure 1)**.

Capacity Charts

SR-4016 Subframe Scissor Hoist			
Body Length	CA	Rear Overhang	Cap. 50° Dump
8'	60"	6"	12.1T
9'	60"	6"	10.6T
9'	60"	18"	14.1T
10'	60"	30"	17.0T
10'	84"	6"	9.4T
11'	84"	6"	8.5T
11'	84"	18"	10.5T
12'	84"	18"	9.4T
12'	84"	30"	12.1T
12'	108"	6"	7.7T
14'	108"	18"	7.7T
Mounting Height/Min Longsill Height			9.6" / 5"
Mounting Distance			71.5"

Figure 2: SR-4016 Capacity Chart

SR-4016B Subframe Scissor Hoist			
Body Length	CA	Rear Overhang	Cap. 50° Dump
8'	60"	6"	12.1T
9'	60"	6"	10.6T
9'	60"	18"	14.1T
10'	84"	6"	9.4T
11'	84"	6"	8.5T
11'	84"	18"	10.5T
12'	84"	18"	9.4T
12'	84"	30"	12.1T
12'	108"	6"	7.7T
14'	108"	18"	7.7T
Mounting Distance			71.5"

Figure 3: SR-4016B Capacity Chart

SR-4020 Subframe Scissor Hoist			
Body Length	CA	Rear Overhang	Cap. 50° Dump
9'	60"	6"	12.8T
10'	84"	6"	11.5T
11'	84"	6"	10.3T
11'	84"	18"	12.8T
12'	84"	18"	11.5T
12'	108"	6"	9.4T
14'	108"	18"	9.4T
Mounting Height/Min Longsill Height			10.5" / 6"
Mounting Distance			84.6"

Figure 4: SR-4020 Capacity Chart

SR-5020 Subframe Scissor Hoist			
Body Length	CA	Rear Overhang	Cap. 50° Dump
10'	84"	6"	12.9T
11'	84"	18"	13.2T
11'	84"	6"	10.8T
12'	84"	30"	17.0T
12'	84"	18"	13.2T
12'	108"	6"	10.8T
14'	108"	30"	13.2T
14'	108"	18"	10.8T
14'	120"	18"	10.8T
14'	120"	6"	9.1T
16'	120"	42"	13.2T
16'	120"	30"	10.8T
Mounting Height/Min Longsill Height			11.3" / 7"
Mounting Distance			90.25"

Figure 5: SR-5020 Capacity Chart

The Capacity Charts (**Figure 2, 3, 4, 5**) are to be used as a reference when determining capacity based on overhang.

NOTE: *Approximately 10% additional capacity can be attained on an SR-4016 or SR-4016B application if sub-frame and hoist are installed at 45°. A sub-frame modification kit can be ordered from Rugby Mfg. if this installation is desired. Refer to the* ***45° Application Sub-frame Modification*** *section of this manual for additional information and instructions.*

Torque Value Chart

Size	Grade 2 Torque	Grade 5 Torque	Grade 8 Torque
			
1/4-20	3-4 lb-ft	6-7 lb-ft	10-11 lb-ft
1/4-28	4-5 lb-ft	8-9 lb-ft	11-12 lb-ft
5/16-18	8-9 lb-ft	14-15 lb-ft	21-22 lb-ft
5/16-24	9-10 lb-ft	15-16 lb-ft	21-22 lb-ft
3/8-16	17-18 lb-ft	24-26 lb-ft	37-40 lb-ft
3/8-24	19-20 lb-ft	28-30 lb-ft	40-43 lb-ft
1/2-13	38-42 lb-ft	60-65 lb-ft	90-100 lb-ft
1/2-20	43-47 lb-ft	70-75 lb-ft	95-105 lb-ft
5/8-11	75-80 lb-ft	122-130 lb-ft	180-190 lb-ft
5/8-18	85-90 lb-ft	145-150 lb-ft	200-210 lb-ft
3/4-10	132-140 lb-ft	220-230 lb-ft	315-330 lb-ft
3/4-16	152-160 lb-ft	250-260 lb-ft	355-370 lb-ft

Figure 6: Torque Values

The Torque Values Chart (**Figure 6**) is to be used as a guide during installation.

General Safety

Hydraulic System

The hydraulic system supplied with an SR-series hoist manufactured by Rugby Manufacturing Co. is made up of components (pump, valves, reservoir, hoses, cylinder, etc.) that are designed to be compatible with each other. Several different types of pump and hydraulic components are available to power the SR-series hoists. Refer to the pump and hydraulic component Installation and Operation Manual for more information.

If hydraulic components are substituted, it is the installer's responsibility to be sure they are compatible with the components supplied by Rugby Manufacturing Co. Incompatible hydraulic components may cause failure of the hoist which in turn could damage the truck, damage other property, and cause human injury or death. Rugby Manufacturing Company's liability and warranty for a given hoist will be voided if it is determined by Rugby Manufacturing Co. that substituted hydraulic components were used that were incompatible with those supplied by Rugby Manufacturing Co.

SR-SERIES HOISTS	**4016/4016B/4020**	**5020**
MAXIMUM HYDRAULIC FLOW RATE (GPM)	4-6	6-9
MAXIMUM UP PRESSURE (PSI)	3200	3200
MAXIMUM DOWN PRESSURE (PSI)	1000	1000

Figure 7: Hydraulic Information Chart

DANGER Bouncing or jerking of the hoist is to be avoided as it may result in component failure, injury or death.

DANGER Do not raise or drive a raised body against another object. Doing so could result in equipment or property damage, injury or death.

DANGER Connecting the hoist to a hydraulic system with more pressure (psi) or flow (gpm) than is recommended can lead to damage, serious injury, or death.

DANGER Do not operate the hoist until bystanders are free & clear of the hoist and body.

DANGER Overloading of a truck can cause truck component damage, injury or death. Never exceed the gross vehicle weight (GVW) or gross axle weight (GAW) rating of your vehicle.

CAUTION Unlatch tailgate prior to elevating a loaded dump body as excessive forces on the rear of the dump body may result in component failure.

Installation

Body Prop Installation

A body prop & required hardware is supplied with every SR-series hoist package. For instructions on how to raise and lower the body prop, refer to the Operation section of this manual.

DANGER

The body prop is only to be used to prop an unloaded body. Serious injury or death can occur if the body prop is misused.

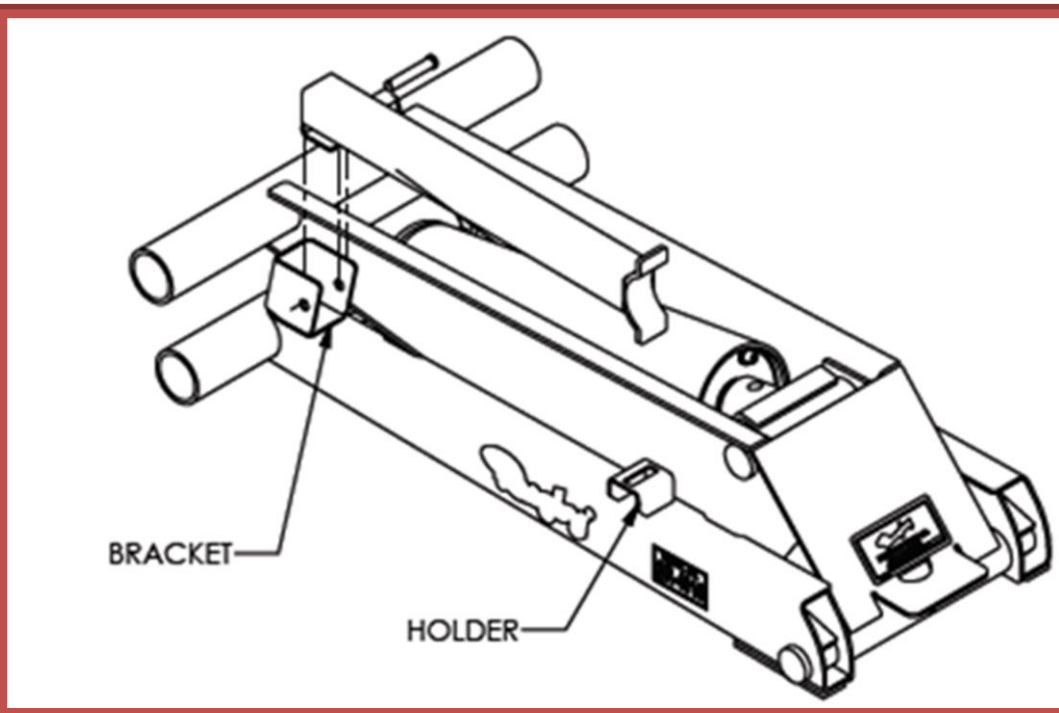

Figure 8: Body Prop Location

1. Insert the body prop into the body prop bracket (**Figure 8**).
2. Fasten the body prop to the body prop bracket using the supplied hardware.
3. Lower the body prop to the down position & align with slot until the body prop rests against the top of the holder.

Hoist & Sub-frame Assembly

A full breakdown of the hoist & sub-frame components can be found in the Diagrams section of this manual.

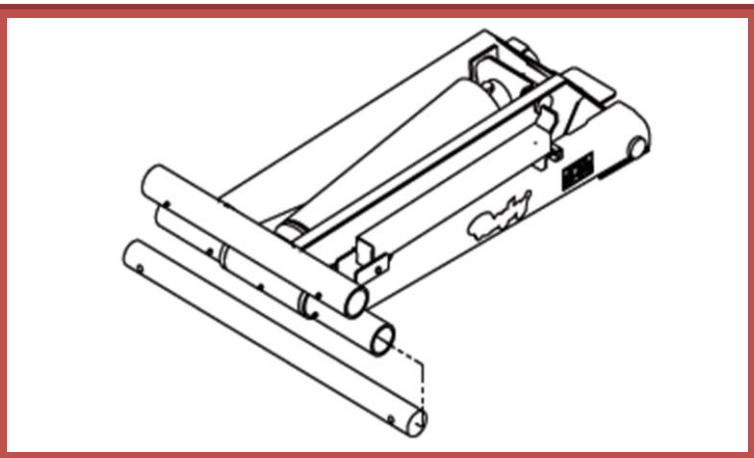

Figure 9: Saddle Tube Location

4. Slide the saddle shaft into the lower tube of the hoist so that approximately 4 inches extend past the tube on each side. (**Figure 9**.)

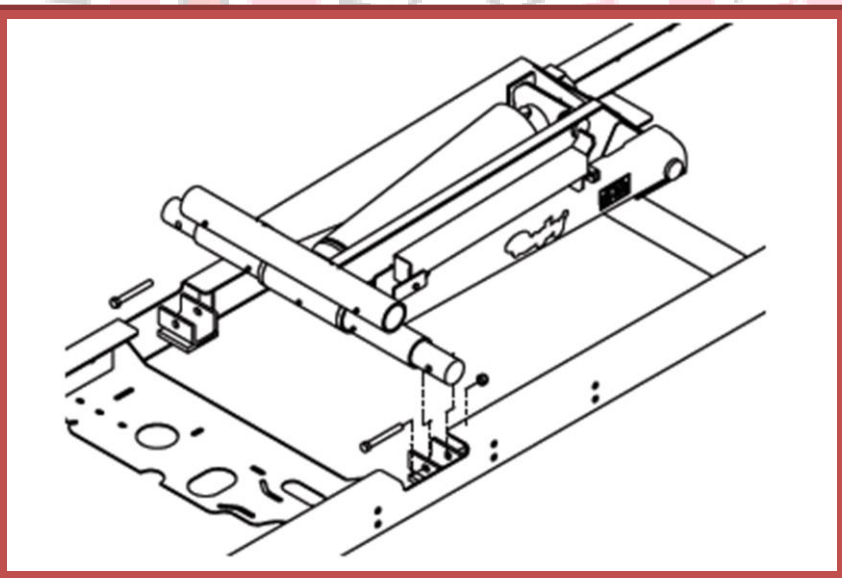

Figure 10: Sub-frame Positioning

2. Position the hoist into the subframe by aligning each end of the saddle shaft into the subframe brackets.
3. Secure the saddle shaft to the sub-frame with the provided hardware as shown in **Figure 10**. Refer to **Figure 6** for torque guidelines.

Hoist & Sub-frame Assembly cont.

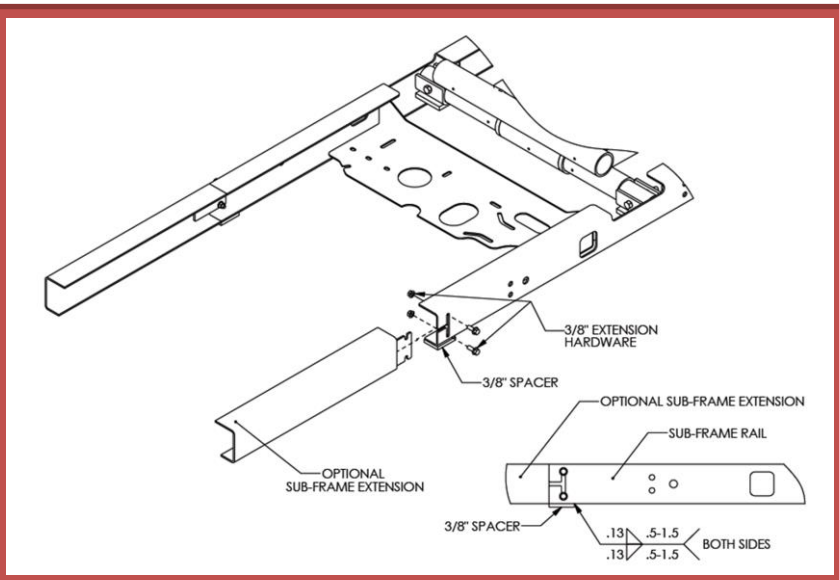

Figure 11: Sub-frame Extension Kit

4. Position the provided 3/8" spacers under each sub-frame rail as far forward as possible. Secure to rail by welding as shown. (**Figure 11)**

NOTE: *Optional 12" or 24" bolt-on sub-frame extensions can be installed to convert the 9' subframe to a 10' or 11' as required. For optional 45° dump angle applications, refer to the* ***45° Application Sub-frame Modification*** *section.*

Hoist & Sub-frame Installation

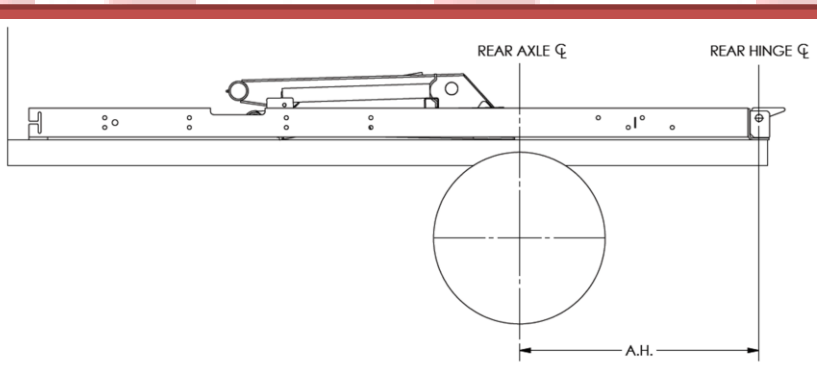

Axle to Rear Hinge (A.H.)	Application
34"	Standard
46"	Ford (rear fuel tank)
49"	Chevrolet & Dodge (rear fuel tank)

NOTE: Above dimensions are approximate.

Figure 12: Hoist Position

Hoist & Sub-frame Installation

1. Position the assembled hoist & sub-frame onto the truck frame using the application chart shown in **Figure 12**.

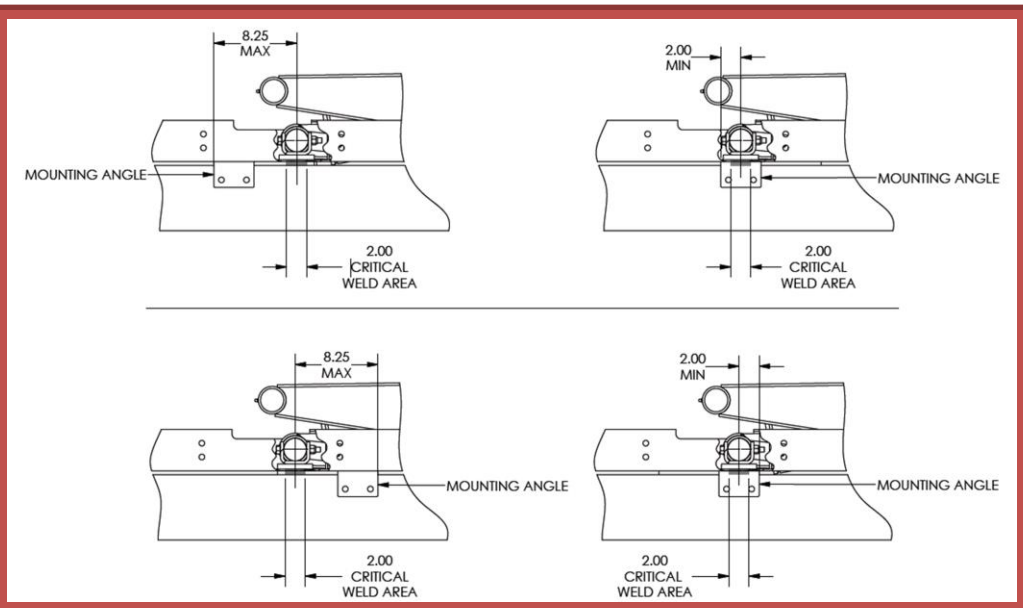

Figure 13: Mounting Angle Location

2. Locate the ideal mounting angle location along the chassis frame while keeping within the guidelines shown in (**Figure 13**). Ensure that the weld from the subframe to the mounting angle will be positioned directly below the saddle tube.

NOTE: Optional 10ga rivet spacers may be positioned under the mounting angle and the rear hinge angle to clear rivets on the truck frame.

DANGER

Welding, oxy-fuel cutting, or grinding sparks can cause fuel to ignite which in turn can lead to injury or death. Always take adequate steps to avoid ignition of fuel from \fuel tanks when welding, grinding, or oxy-fuel cutting during equipment installation.

DANGER

Heat from the truck's exhaust system can cause hydraulic component failure and may lead to a fire which could cause injury or death. Always install equipment in locations where heat from the exhaust system will not damage any hydraulic components.

Hoist & Sub-frame Installation

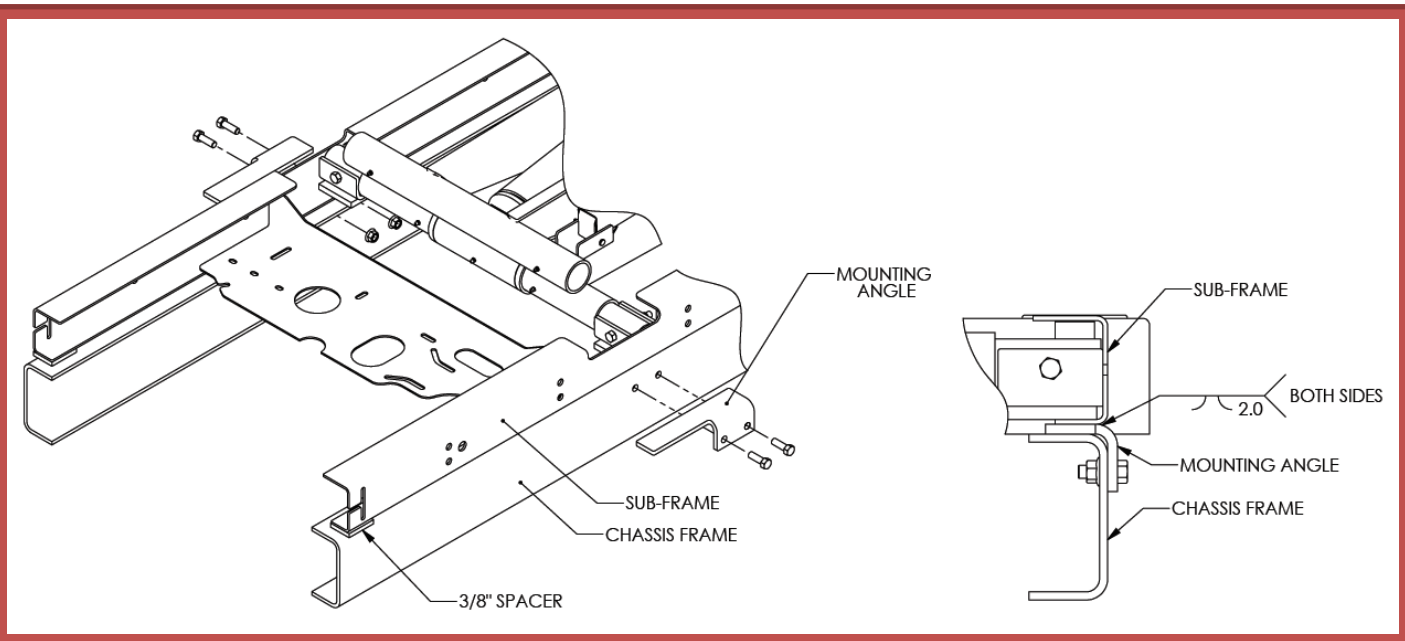

Figure 13: Sub-frame Mounting

3. Secure each mounting angle to the truck frame by drilling two 17/32" diameter holes and bolting the mounting angles to the truck frame using two 1/2" GR8 bolts and nuts (**Figure 13**).
4. Weld each mounting angle to the sub-frame rail, keeping within the guidelines shown in (**Figure 13**). Do not weld the mounting angles to the chassis frame.

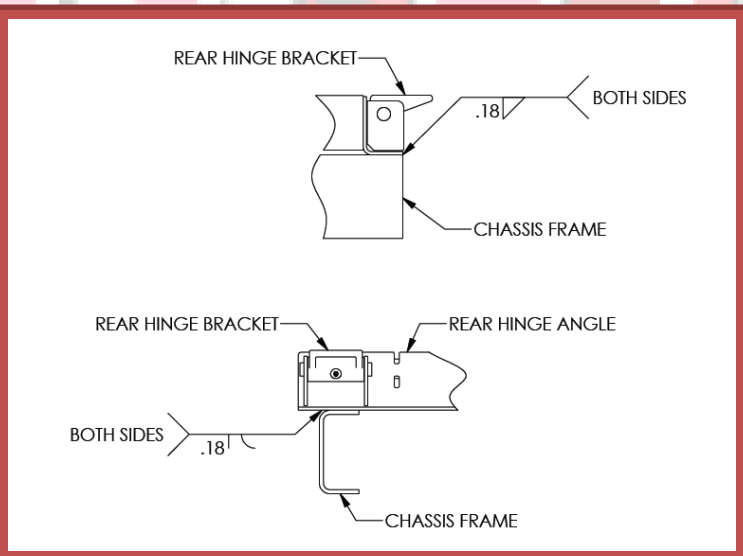

Figure 14: Rear Hinge Installation Location

5. Next, weld the rear hinge angle to the chassis frame as shown in **Figure 14**.
6. Cut any excess frame off behind the sub-frame rear hinge.

Hoist & Sub-frame Installation

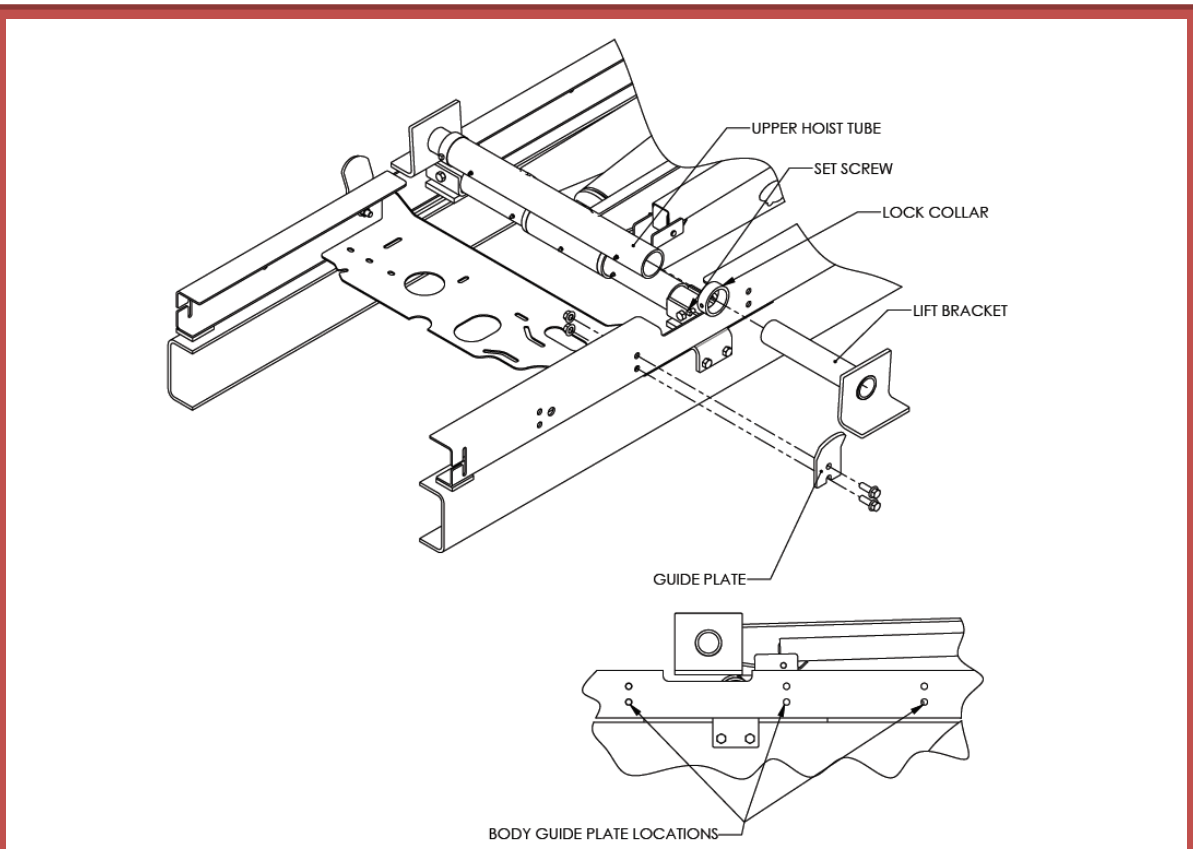

Figure 15: Lift Shaft Installation

7. Slide a lock collar onto each lifting shaft, and then slide the shafts into each end of the upper hoist tube (**Figure 15**).
8. Install a body guide plate onto each sub-frame rail using a set of bolt holes provided. Fasten guides using the supplied hardware.

Hoist & Sub-frame Installation

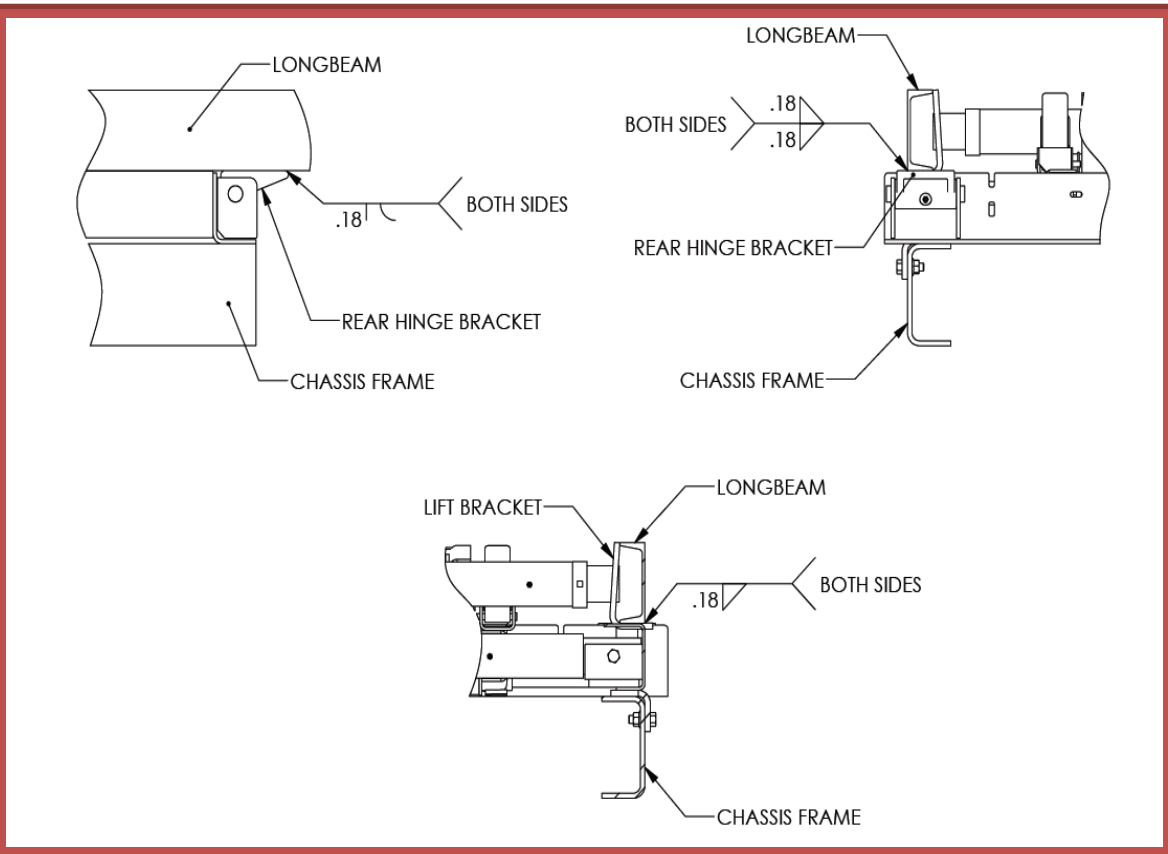

Figure 16: Body to Sub-frame Installation

9. Position the rear hinge brackets against the bottom side of the long beams. Once in position, weld the rear hinge brackets to the body long beams as shown in **Figure 16**.
10. Slide each lift bracket against the inside of the long beam channel. Then weld the lift bracket to the outside of the long beam (**Figure 16**).
11. With the lift bracket secured, slide the lock collars against the hoist lifting tube and lock them in place by tightening the 3/8” set screw.

Hoist & Sub-frame Installation cont.

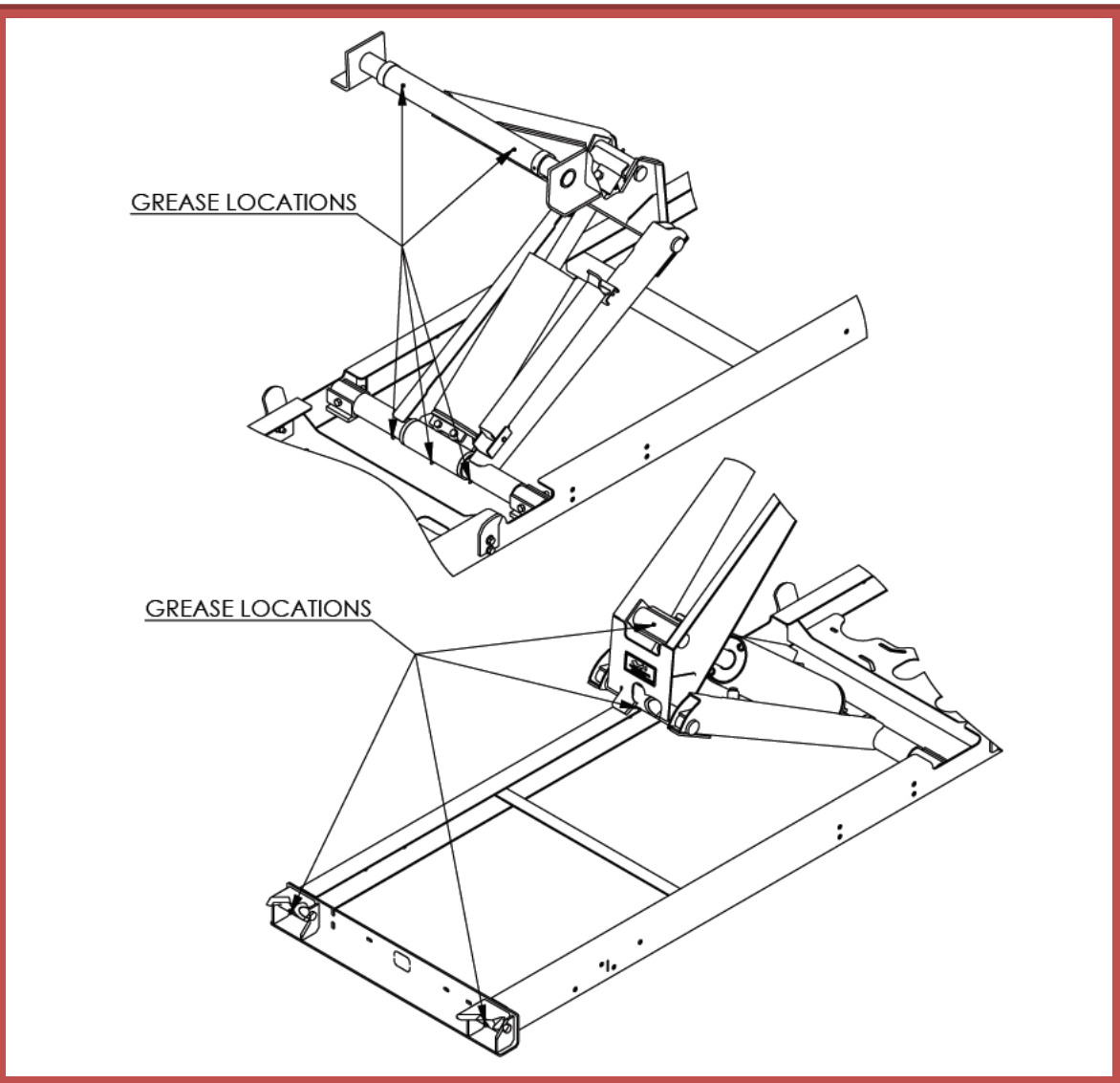

Figure 17: Grease Fitting Locations

12. Install and grease the fittings as shown in **Figure 17.**

45° Application Sub-frame Modification

This section outlines the steps required to convert the standard SR-4016 50° application sub-frame into a 45° application sub-frame. Additional modifications to cross-members or other platform/dump body components may be required.

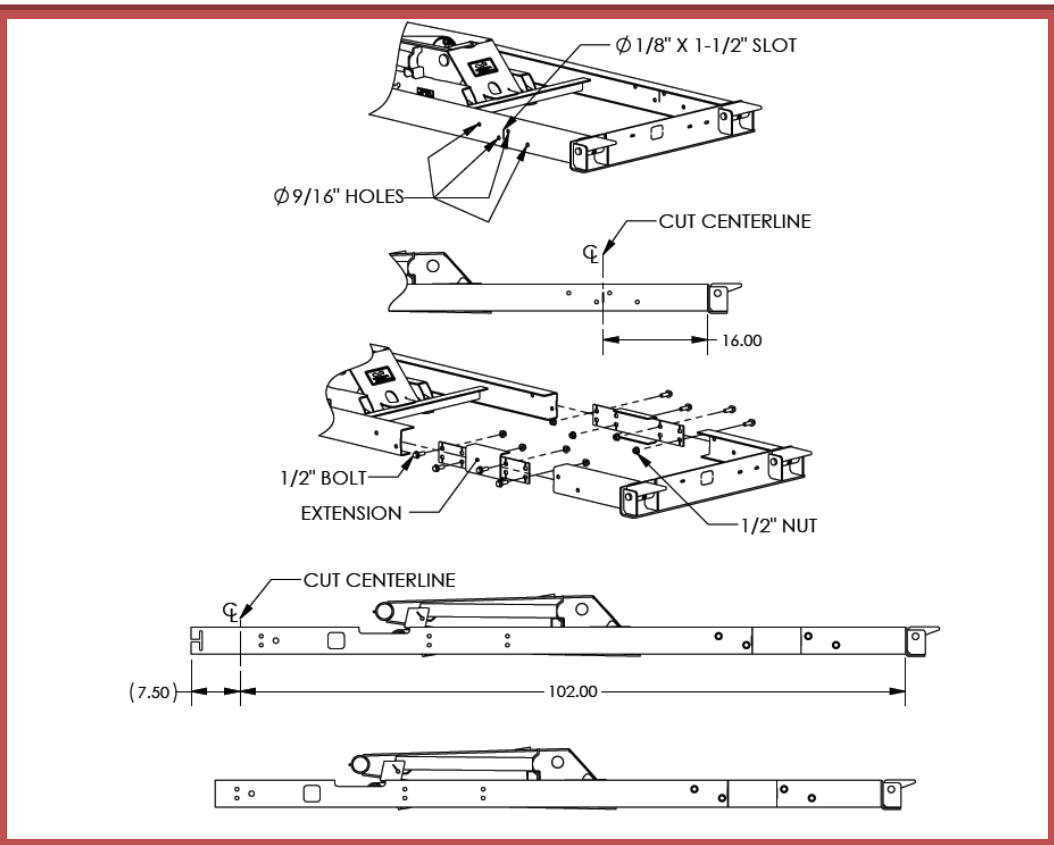

Figure 18: 45° Sub-frame Modification

1. Contact Rugby MFG to order the required kit for this modification: 1867517 - EXTENSION, 45 DEGREE SF MOD PCBLK.
2. Locate the Ø 1/8” x 1-1/2” slot found on the left and right sub-frame channels.
3. Cut through the left and right sub-frame channels at the cut centerline as shown in **Figure 18**.
4. Insert an extension between the front and rear portion of the sub-frame rails and install the 1/2” hardware.
5. Cut off the excess from the front of the sub-frame channels as applicable to return the sub-frame channel to the original 102” overall dimension.
6. The sub-frame is now set up for a 45° dump angle. Continue installing the hoist and sub-frame per the ***Hoist & Sub-frame Installation*** section of this manual.

Decal Locations

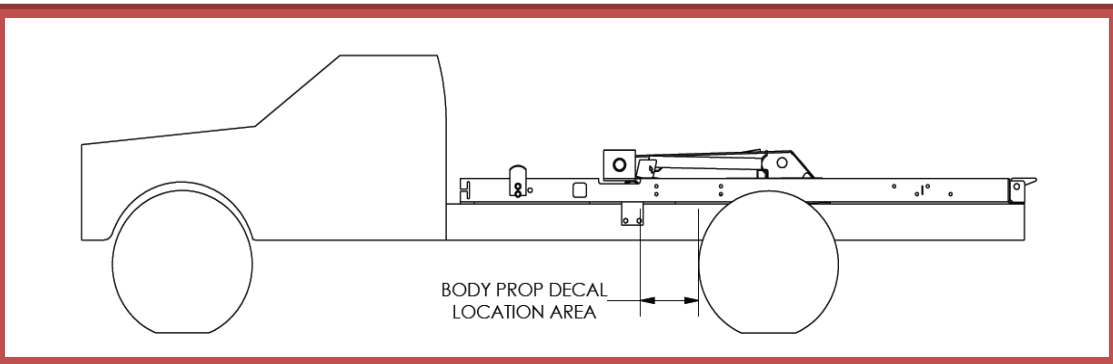

Figure 19: Body Prop Decal Location

Two Body Prop Operation decals are supplied with each SR-series hoist. These decals must be positioned as shown in (**Figure 19**). The chosen decal location should be free of any viewing obstructions.

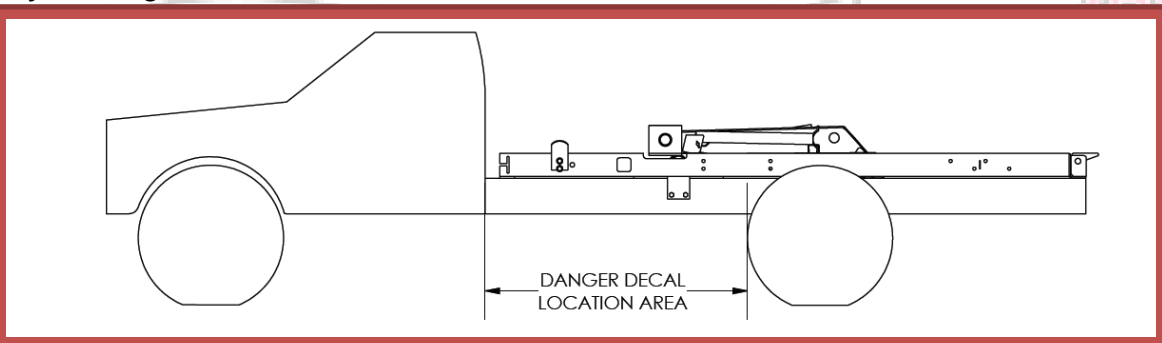

Figure 20: Danger Decal Location

Two Danger decals are supplied with each SR-series hoist. These decals must be positioned as shown in (**Figure 20**) on both the left and right hand sides of the truck. The chosen decal locations should be free of any viewing obstructions.

DANGER

Missing or damaged decals can lead to accidents which may cause serious injury or death. If any decals are missing or damaged, they must be replaced immediately.

NOTE: To obtain replacement decals, contact your Rugby dealer or Rugby Manufacturing Co.

Operation

Body Prop Operation

1. Raise unloaded body to sufficient height and shut off all power.
2. While positioning yourself as far as possible from underneath the truck, grasp prop from latched position.
3. Rotate prop upwards to vertical position.
4. Push down until the prop locks in vertical position.
5. To lower the body prop for operation of truck, “reverse” the above procedure.

DANGER

The body prop is only to be used to prop an unloaded body. Serious injury or death can occur if the body prop is misused.

Maintenance

Grease all hoist and rear hinge grease fittings every 100 cycles or every two months. Some grease fittings are in hard to find locations - Refer to Figure 15 for all grease fitting locations. Check hardware regularly and retighten as needed. Refer to Figure 3 for torque guidelines. Check hydraulic components regularly for any leaks or signs of wear. Replace damaged or leaking components as needed. Refer to the pump or hydraulic components installation and operation manual for more service information.

Diagrams

ITEM	PART #	DESCRIPTION	QTY
1	1822323	FRAME, SR-4016 PCBLK HOIST	1
2	1831466	CYLINDER, 5.50 X 16	1
3	1822321	SUBRRAME, 09’ SR-4016 PCBLK	1
4	1839407	PROP, BODY PCBLK	1
5	1653917	PIN, 1/8” X 1” PLATED COTTER	1
6	1857937	PIN, ½” X 2.75” ZP CLEVIS	1
7	1822289	BRACKET, SR LIFT	2
8	1653845	SET SCREW, 3/8-16 X 5/8 SQR HD, BLK	2
9	1656191	LOCK COLLAR, 2.25	2
10	1620051	HHC SCREW, ½-13 X 2.5, GR. 8, PLT	2
11	1642984	NUT, 1/2-13 NYLOCK - NE, GR8 STL	4
12	1653838	HHC SCREW, 5/8-11 X 4 , GR8, PLT	1
13	1643070	NUT, 5/8-11 NYLOCK - NE, GR. 5 STL	1
14	1520370	FITTING, 1/4-28 THREAD FORMING GREASE	7
15	1581116	SERIAL NO. PLATE, POLY W/MASK	1
16	1822332	SHAFT, SADDLE PIVOT	1
17	1653835	HHC SCREW, 1/2-13 X 4 GR5 PLT	2
18	1822291	PLATE, SUBFRAME BODY GUIDE	2
19	1577459	BOLT, 1/2-13 X 1-1/2 FLG GR5	4
20	1576016	NUT, 1/2-13 FLANGE, GR5 STL, PLT	4
21	1535863/ 1851733	KIT, SUB-FRAME EXTENSION (OPTIONAL)	1

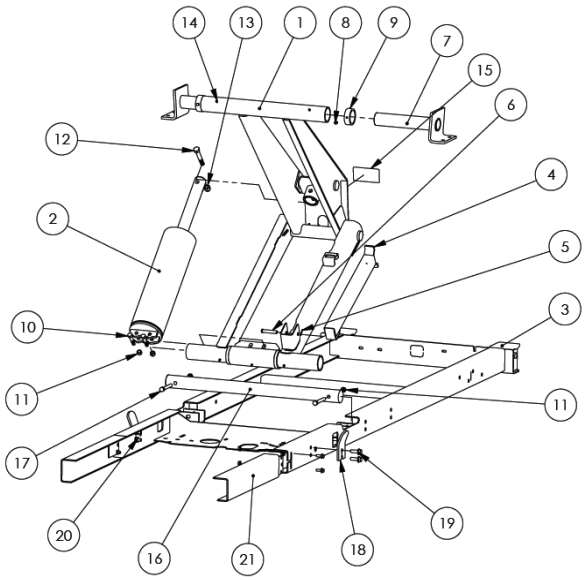

Figure 21: SR-4016/4016B Sub-frame and Hoist

ITEM	PART #	DESCRIPTION	QTY
1	2117068	FRAME, SR-4020 PCBLK HOIST	1
2	1315043	CYLINDER, 5.5 X 20 HR-550	1
3	2193587	SUBFRAME, 09" SR-4020	1
4	1839407	PROP, BODY PCBLK	1
5	1653917	PIN, 1/8" X 1" COTTER	1
6	1857937	PIN, 1/2" X 2.75" ZP CLEVIS	1
7	1822289	BRACKET, SR LIFT	2
8	1653845	SET SCREW, 3/8-16 X 5/8 SQR HD BLK	2
9	1656191	COLLAR, 2.25 LOCK	2
10	1653835	SCREW, 1/2-13 X 4 HHC GR5 PLT	2
11	1642984	NUT, 1/2-13 NYLOCK - NE GR8 STL	4
12	1653838	SCREW, 5/8-11 X 4 HHC GR8 PLT	1
13	1643070	NUT, 5/8-11 NYLOCK - NE, GR. 5 STL	1
14	1520370	FITTING, 1/4-28 THREAD FORMING GREASE	7
15	1581116	SERIAL NO. PLATE, POLY W/MASK	1
16	1898583	SHAFT, SADDLE PIVOT	1
17	1653835	SCREW, 1/2-13 X 4 HHC GR5 PLT	2
18	1831125	PLATE, BOLT-ON PCBLK BODY GUIDE	2
19	1577459	BOLT, 1/2-13 X 1-1/2 FLG GR5	4
20	1576016	NUT, 1/2-13 FLANGE GR5 STL PLT	4
21	1535863/ 1851733	KIT, SUB-FRAME EXTENSION (OPTIONAL)	1

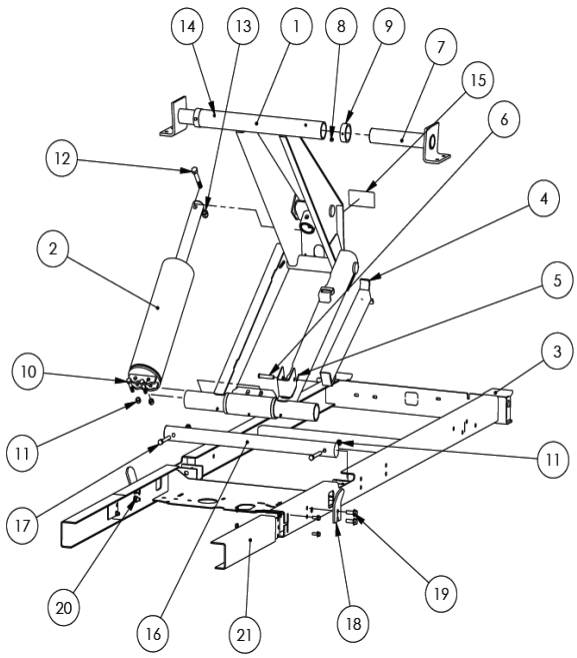

Figure 22: SR-4020 Sub-frame and Hoist

ITEM	PART #	DESCRIPTION	QTY
1	1844062	FRAME, SR-5020 PCBLK HOIST	1
2	1621268	CYLINDER, 6 X 20, 2.5 ROD, 2.0 NECK	1
3	1653838	HHC SCREW, 5/8-11 X 4, GR8, PLT	1
4	1643070	NUT, 5/8-11 NYLOCK - NE, GR. 5 STL	1
5	1520370	FITTING, 1/4-28 THREAD FORMING GREASE	7
6	1581116	SERIAL NO. PLATE, POLY W/MASK	1
7	1844096	SHAFT, 5020 CYL PINNING	1
8	1653921	COTTER PIN, 5/16" X 3-1/2" PLATED	2
9	1844097	SUBFRAME, 09' SR-5020 PCBLK	1
10	1822332	SHAFT, SADDLE PIVOT	1
11	1653835	HHC SCREW, 1/2-13 X 4 GR5 PLT	2
12	1642984	NUT, 1/2-13 NYLOCK - NE, GR8 STL	2
13	1839407	PROP, BODY PCBLK	1
14	1857937	PIN, 1/2" X 2.75" ZP CLEVIS	1
15	1653917	PIN, 1/8" X 1" PLATED COTTER	1
16	1822289	BRACKET, SR LIFT	2
17	1656191	LOCK COLLAR, 2.25	2
18	1653845	SET SCREW, 3/8-16 X 5/8 SQR HD, BLK	2
19	1831125	PLATE, BOLT-ON PCBLK BODY GUIDE	2
20	1577459	BOLT, 1/2-13 X 1-1/2 FLG GR5	4
21	1576016	NUT, 1/2-13 FLANGE, GR5 STL, PLT	4
22	1535863/ 1851733	KIT, SUB-FRAME EXTENSION (OPTIONAL)	1

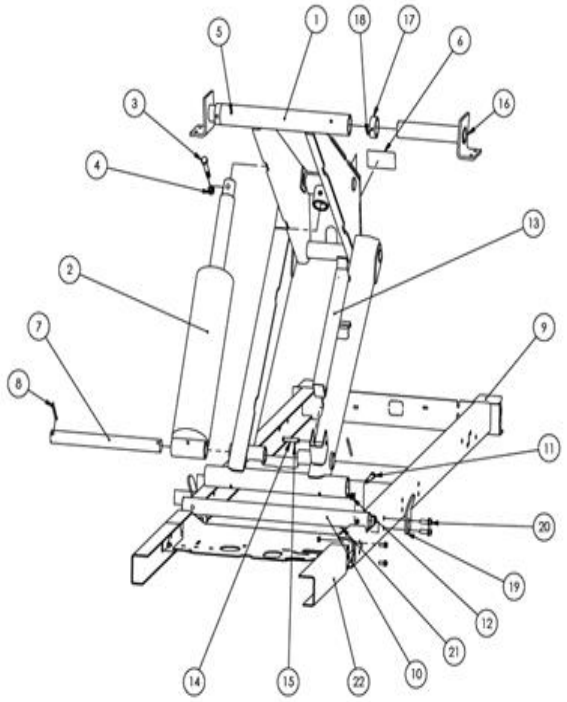

Figure 23: SR-5020 Sub-frame and Hoist